CHAMPION
POWER EQUIPMENT
TM-MC

MODEL #100780

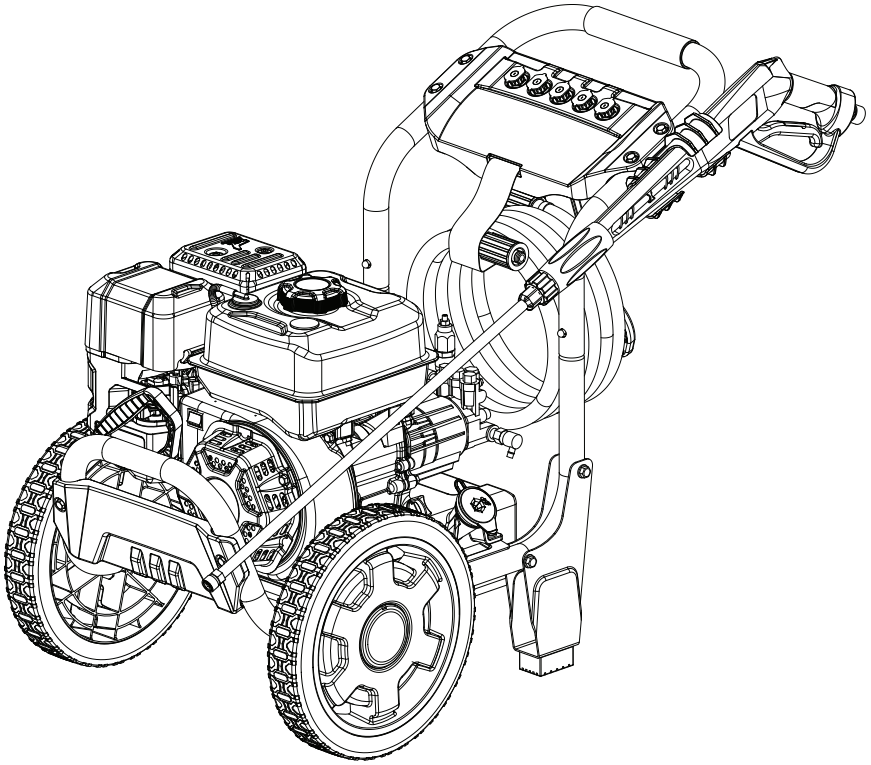

PARTS INFORMATION

3100 PSI PRESSURE WASHER

SERIAL NUMBER RANGE: ALL

To order replacement parts please visit:
shop.championpowerequipment.com
or call **1-877-338-0999.**

REV 20211203

TABLE OF CONTENTS

Pressure Washer Parts Diagram 3

Pressure Washer Parts List 4

Engine Parts Diagram 5

Engine Parts List 6

PRESSURE WASHER PARTS DIAGRAM

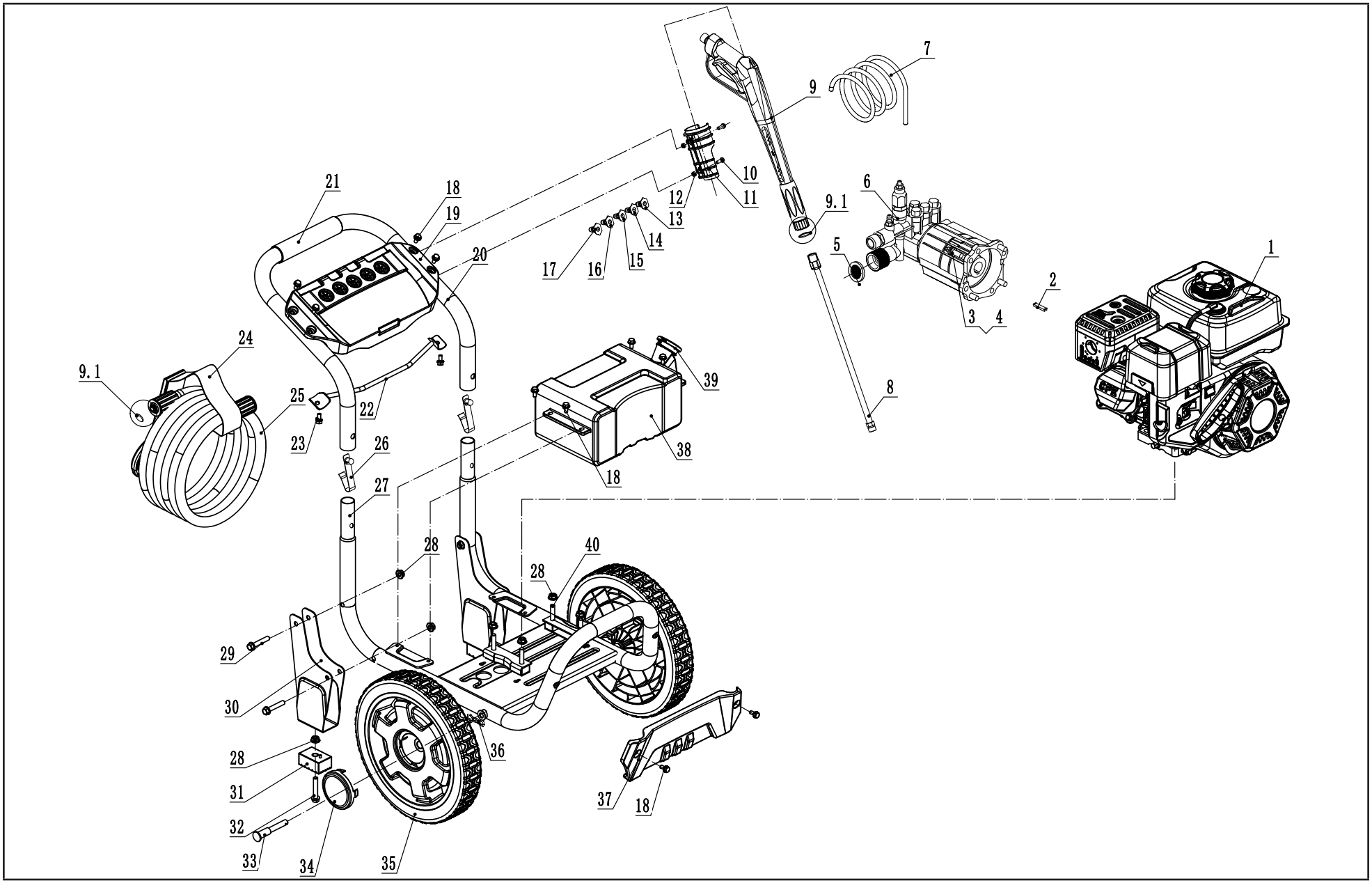

PRESSURE WASHER PARTS LIST

#	Part Number	Description	Qty.
1	27.301	Engine, 224cc	1
2	2.14.001	Key, 4.78 x 4.78 x 40	1
3	2.08.010	Bolt 5/16-24 x 22	4
4	1.93.08	Lock Washer Ø8	4
5	252.251003.00	Inlet Filter Gasket	1
6	252.251000.02	Pump Body	1
7	254.250100.11	Detergent Hose, 23.6in.	1
8	254.252200.00	Wand	1
9	254.252100.00.48	Handle, Gun , Yellow	1
9.1	2.07.034	O Ring , Ø14 x Ø9 x Ø2.5	3
10	1.5783.0645.1	Bolt M6 x 45, Black	2
11	254.200012.05.2	Trigger Gun Holder, Black	1
12	1.6177.1.06.1	Lock Nut M6, Flange , Black	2
13	254.252300.05	Nozzle "Detergent", 65400	1
14	254.252300.03	Nozzle "40", 40025	1
15	254.252300.02	Nozzle "25", 25025	1
16	254.252300.01	Nozzle "15",15025	1
17	254.252300.00	Nozzle"0", 00025	1
18	1.5789.0612.1	Flange Bolt M6 x 12, Black	10
19	251.200800.01.2	Top Panel, Black	1
20	251.200701.02.78	Handle, Frame, 877C	1
21	251.200702.02	Handle Grip	1
22	251.201600.00.78	Support Plate, 877C	1
23	1.5789.0612	Flange Bolt M6 x 12	2
24	9.4300.000	Hose Strap	1
25	254.250100.00	High-Pressure Hose, 25ft.	1
26	252.201300.00	Pin	2
27	61160.0.78	Frame, 877C	1
28	1.6177.1.08	Lock Nut M8, Flange	14
29	1.5789.0845	Flange Bolt M8 x 45	4

#	Part Number	Description	Qty.
30	251.200002.01.78	Support Leg, 877C	2
31	122.201400.04.29	Rubber, Support, Cool Gray 11	2
32	1.5789.0825	Flange Bolt M8 x 25	2
33	122.201501.00	Pin Roll, Wheel	2
34	254.201702.04.48	Cap, Wheel, Yellow	2
35	254.201701.04.48	Wheel, PU,Yellow	2
36	2.16.005	Clip Ø2, "B" Shape	2
37	251.200800.02.2	Front Bumper, Black	1
38	251.250202.00	Detergent Tank	1
39	254.250203.01	Cap, Water Tank	1
40	252.201200.00	Vibration Mount, Engine	2

ENGINE PARTS DIAGRAM

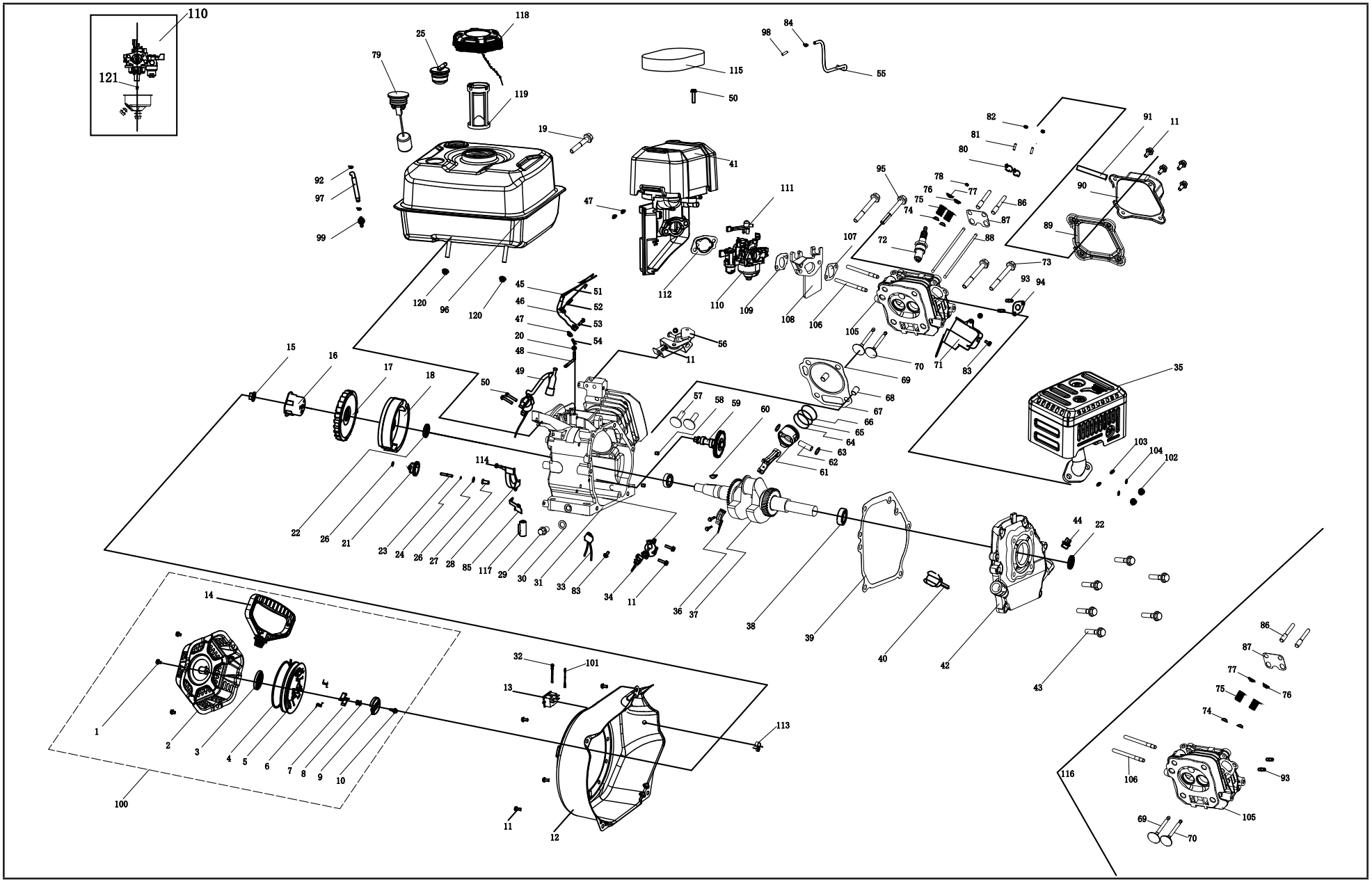

ENGINE PARTS LIST

#	Part Number	Description	Qty.
1	1.16674.0608	Flange bolt M6 x 8	3
2	27.061100.02.2	Cover, Recoil Starter, Black	1
3	21.061005.00	Spring, Recoil Starte	1
4	2.10.003.1	Rope Ø4 x 1550, Black	1
5	21.061001.01	Reel, Recoil Starter	1
6	45.060003.00	Spring, Ratchet	2
7	45.060002.00	Starter Ratchet, Steel	2
8	45.060009.00	Spring, Ratchet Guide	1
9	45.060007.00	Ratchet guide	1
10	45.060008.00	Screw, Ratchet Guide	1
11	1.5789.0612	Flange Bolt M6 x 12	12
12	27.080100.09.48	Fan cover, Yellow	1
13	5.1000.011	Switch	1
14	23.061006.01	Handle, Recoil	1
15	2.02.006	Nut M14	1
16	23.060001.01	Pulley, Start	1
17	27.080001.00	Cooling fan	1
18	24.120100.02	Flywheel	1
19	2.08.156	Flange Bolt Assembly M6 x 33	1
20	2.03.021.1	Washer Ø6.4 x Ø13 x 1	1
21	21.110100.00	Gear, Governor	1
22	2.11.001	Oil Seal Ø25 x Ø41.3 x 6	2
23	21.110013.00	Shaft, Governor Gear	1
24	21.110011.00	Clip, Governor Gear	1
25	152.070800.00	Reversal Valve	1
26	2.03.020.1	Washer Ø6.2 x Ø15 x 0.5	2
27	21.110012.01	Bushing, Govornor Gear	1
28	23.080600.00	Air Guide, Right	1
29	2.08.037	Drain Bolt M10 x 1.25 x 25	2
30	2.03.016	Washer Ø10 x Ø16 x 1.5, Drain Bolt	2

#	Part Number	Description	Qty.
31	27.030100.06	Crankcase	1
32	27.120300.00	Ground Lead	1
33	21.120400.00	Diode Assembly	1
34	21.127000.02	Oil Level Sensor	1
35	27.101000.12.2	Muffler Assembly, Black	1
36	27.050200.00	Connecting Rod	1
37	27.050100.01	Crankshaft, Q	1
38	1.276.6205	Bearing 6205	2
39	24.030008.00	Gasket, Crankcase Cover	1
40	21.031000.00.48	Oil Dipstick Assembly, Yellow	1
41	27.091000.05	Air Cleaner Assembly	1
42	24.030007.00	Crankcase cover	1
43	1.5789.0832	Flange bolt M8 x 32	6
44	21.031000.01.48	Oil filler cap, Yellow	1
45	23.110005.01	Throttle return spring	1
46	27.110003.00	Governor arm	1
47	1.6177.06	Nut M6	3
48	21.110001.00	Shaft, Governor Arm	1
49	22.123000.07	Ignition Coil	1
50	1.5789.0625	Flange Bolt M6 x 25	3
51	23.110006.00	Rod, Governor	1
52	23.110007.00	Spring, Governor	1
53	2.08.040	Bolt M6 x 21, Governor Arm	1
54	21.110008.00	Pin, Shaft	1
55	24.070014.06	Pipe, Reversal Valve	1
56	27.111000.00	Control assembly	1
57	25.040013.00	Lifter, Valve	2
58	2.04.001	Dowel Pin Ø9 x 14	2
59	27.041000.01	Camshaft	1
60	2.14.012	Woodruff Key 4 x 7.5 x 19	1

ENGINE PARTS LIST

#	Part Number	Description	Qty.
61	27.050005.00	Piston	1
62	23.050003.00	Pin, Piston	1
63	2.09.001	Circlip Ø18 x Ø1	2
64	27.050303.00	Ring, Oil	1
65	27.050302.00	Ring, Second Piston	1
66	27.050301.00	Ring, First Piston	1
67	27.030009.01	Gasket, Cylinder Head	1
68	2.04.003	Dowel Pin Ø10 x 14	2
69	23.040002.02	Valve, Intake	1
70	23.040006.02	Valve, Exhaust	1
71	26.080400.00	Air Guide, Lower	1
72	2.15.002	Spark Plug F6RTC	1
73	1.5789.0865	Flange Bolt M8 x 65	3
74	23.040017.00	Valve Oil seal	2
75	21.040003.00	Oil Seal, Valve	2
76	21.040007.00	Retainer, Exhaust Valve Spring	1
77	21.040001.00	Retainer, Intake Valve Spring	1
78	21.040008.00	Rotator, Exhaust Valve	1
79	27.072000.00	Fuel Gauge Assembly	1
80	21.040009.00	Rocker Arm	2
81	21.040020.00	Screw, Valve Adjustment	2
82	21.040021.00	Nut M6, Lock	2
83	1.5789.0608	Flange Bolt M6 x 8	3
84	2.06.006	Clamp Ø7 x Ø1	1
85	21.080002.00	Support, Diode	1
86	21.040010.00	Bolt, Rocker Arm	2
87	23.040004.00	Guide Plate, Push Rod	1
88	27.040005.00	Push Rod	2
89	21.020002.00	Gasket, Cylinder Head Cover	1
90	15.021000.00	Cover, Cylinder Head	1
91	21.020001.00	Breather tube	1
92	2.06.005	Clamp Ø9 x Ø1	2

#	Part Number	Description	Qty.
93	2.01.010	Stud Bolt M8 x 35	2
94	26.100001.00	Gasket, Exhaust Pipe	1
95	2.08.121	Flange Bolt M10 x 65	1
96	27.071000.01.2	Fuel Tank	1
97	24.070011.03	Fuel Pipe	1
98	24.070030.00	Venthole	1
99	21.070600.03	Fitting, Fuel Tank	1
100	27.061000.02	Recoil Assembly	1
101	27.120300.01	Off Line	1
102	1.6175.08	Nut M8	2
103	1.848.08	Washer Ø8	2
104	1.93.08	Lock Washer Ø8	2
105	26.010100.01	Cylinder Head, 224cc	1
106	2.01.009	Stud Bolt M6 x 110	2
107	24.130002.00	Gasket, Insulator	1
108	23.130001.00	Insulator, Carburetor	1
109	22.130003.00	Gasket, Carburetor	1
110	27.131000.20	Carburetor	1
111	27.130100.00	Choke Handle	1
112	21.130004.00	Gasket, Air Cleaner	1
113	2.05.005	Clamp Ø6 × 6.5	1
114	1.5789.0620	Flange Bolt M6 x 20	1
115	27.091003.05	Element, Air Cleaner	1
116	27.010000.00	Cylinder Head Assembly	1
117	27.210003.00	Wire Sheath	1
118	24.070100.04	Cap, Fuel Tank	1
119	46.070300.00	Fuel Filter, Fuel Tank	1
120	1.6187.1.06	Nut M6	2
121	27.131017.04	Main Jet, Standard	1
	27.131017.04.01	Main Jet, Altitude	